Quantum
Mechanical &
Electromagnetic
Systems
Modelling Lab

Differential Interconnects with Integrated Equalization and Common-Mode Filtering for Broadband Signal Integrity Enhancement in High-Speed PAM-4 Signaling

Tim Pattyn, Arno Moerman, Martijn Huynen, Dries Vande Ginste

quest.

Ever-increasing trend towards higher communication speeds

Evolution of PCI Express data rate

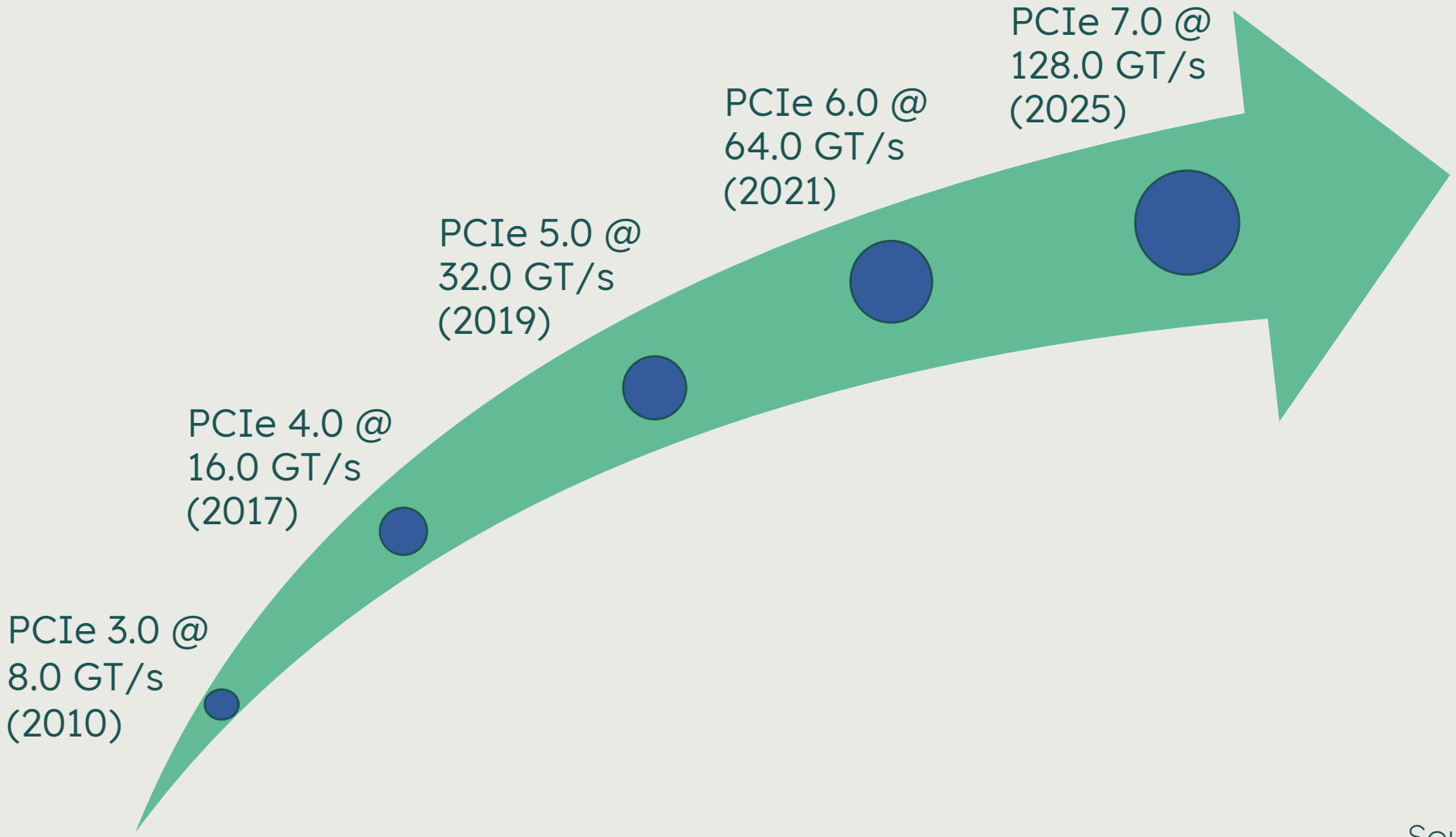

Source: PCI-SIG, 2022

Widespread usage of differential signaling to support this trend

But, not all issues are resolved

Differential signals have better noise margins and more favorable EMC properties

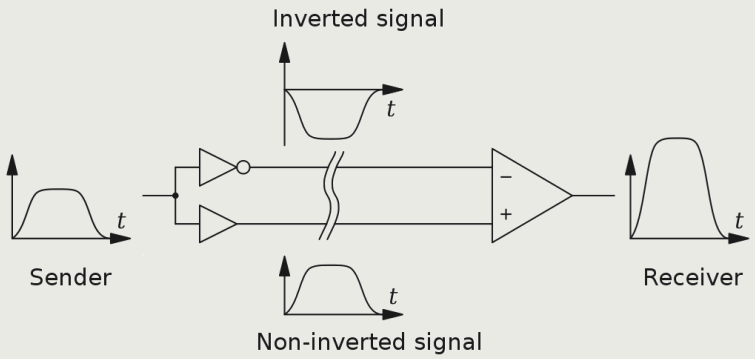

However, low-pass effect inherent to all practical interconnects still remains present for the differential signal due to:

- Skin-effect
- Substrate and radiation losses
- Surface finish

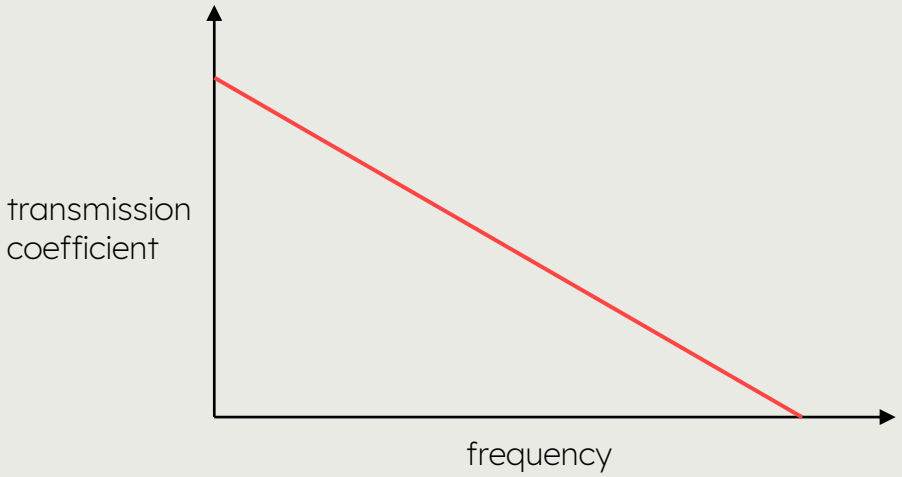

In time domain, this results in a distorted pulse arriving at the receiver, causing detrimental signal integrity issues

Widespread usage of differential signaling to support this trend

And, new issues also emerge

Desired differential mode can be converted to common mode by asymmetries in the circuit

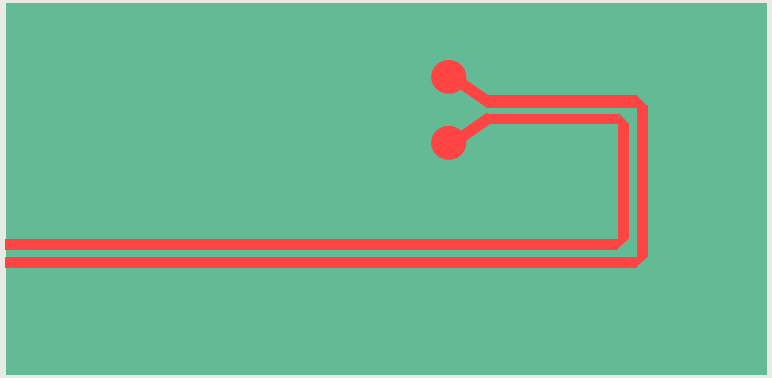

Practical circuits always have asymmetries, e.g., drivers, bends, lumped components, fabrication, etc.

Common-mode signals are highly undesired as they introduce additional noise as well as radiation, again causing signal integrity issues

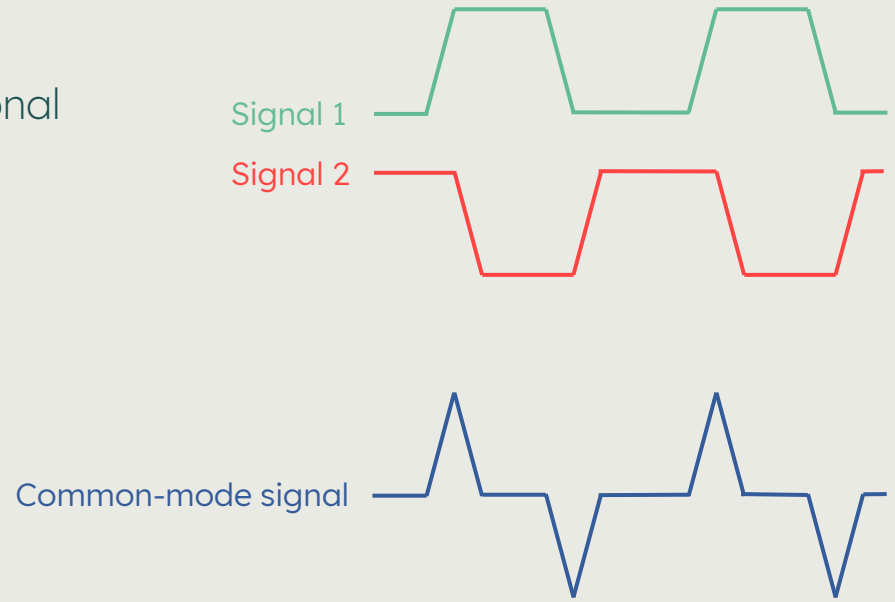

At quest, we developed a novel equalizer topology that tackles both of these problems

Wide variety of equalization techniques already available: active, passive, analog, digital, etc.

Our solution is passive → cost-efficient, yet effective!

Differential-mode equalization while simultaneously reducing common-mode noise

Increased signal integrity at receiving end for a PAM-4 modulation scheme

Differential-mode equalization

Common-mode filtering

Application to serpentine delay line

Conclusions

Add open-circuited stub to classic RL-type equalizer

Load impedance seen by TML_1 becomes frequency-dependent allowing for a significant increase in the resulting bandwidth

TML_2 needs to be shorter than TML_1 in order to get the maximum obtainable bandwidth

However, the corresponding transfer function is not suited for straightforward equalizer synthesis

→ approximate topology by its different operating modes

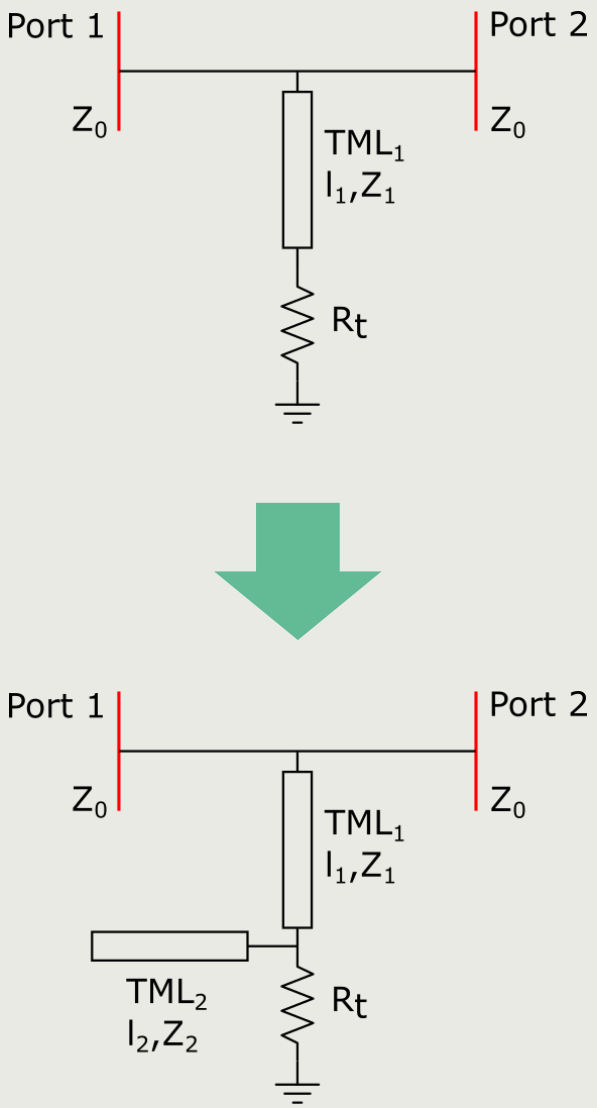

Operating modes facilitate equalizer synthesis

DC operation

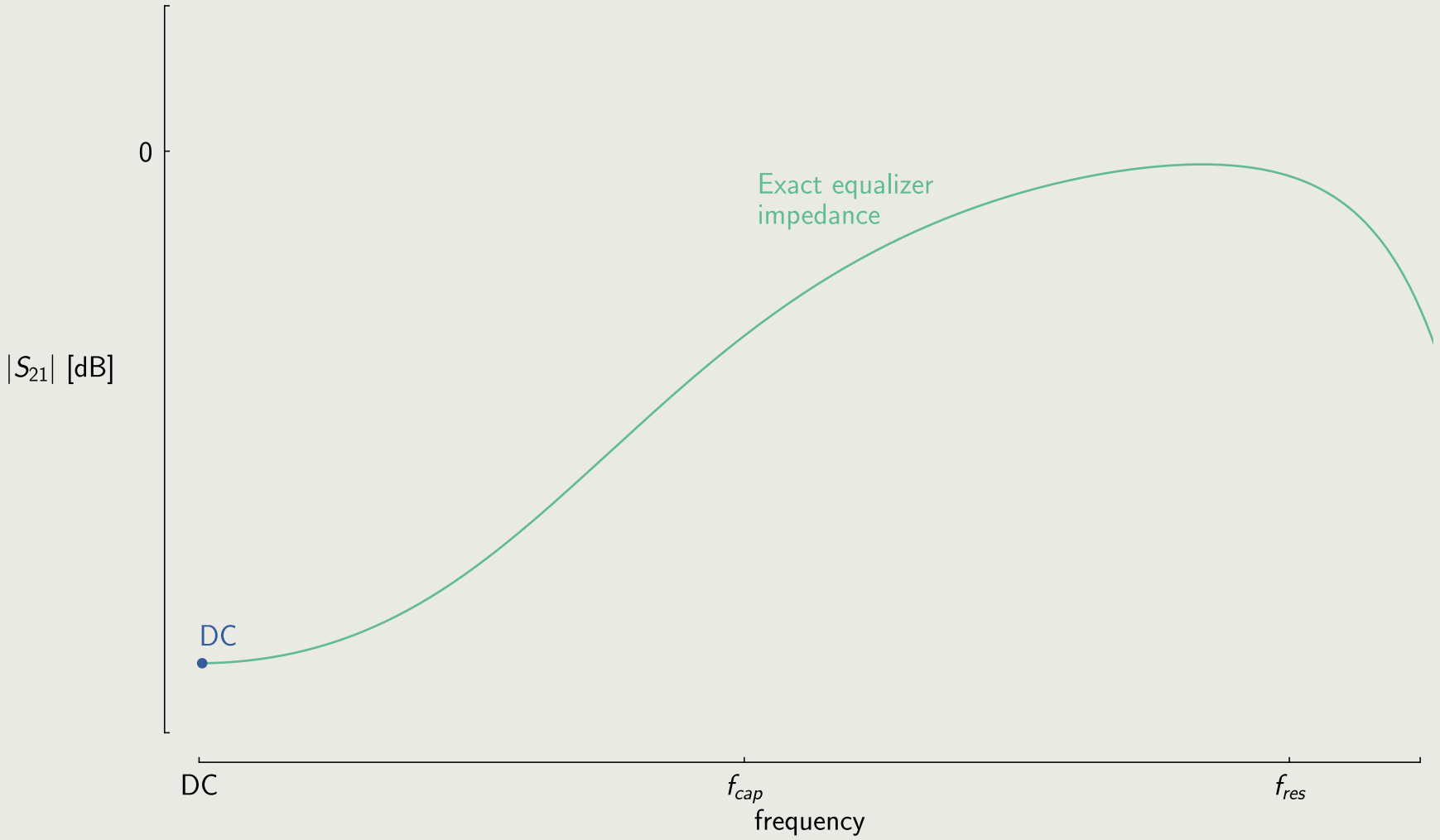

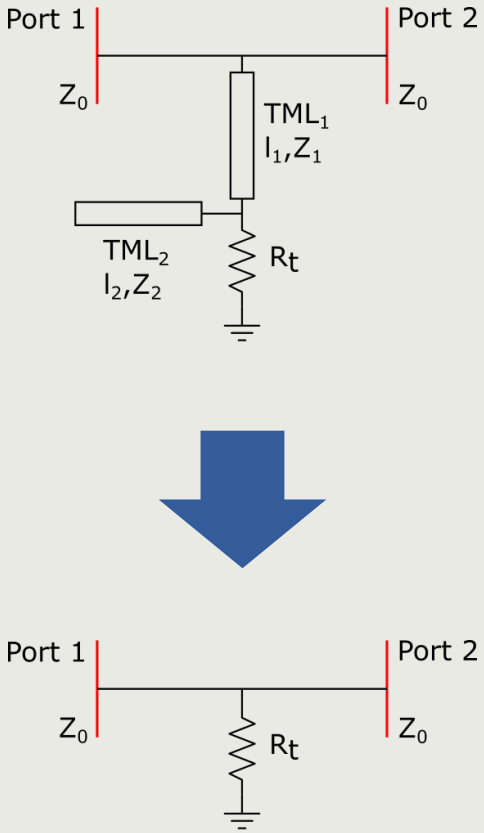

Operating modes facilitate equalizer synthesis

Capacitive stub

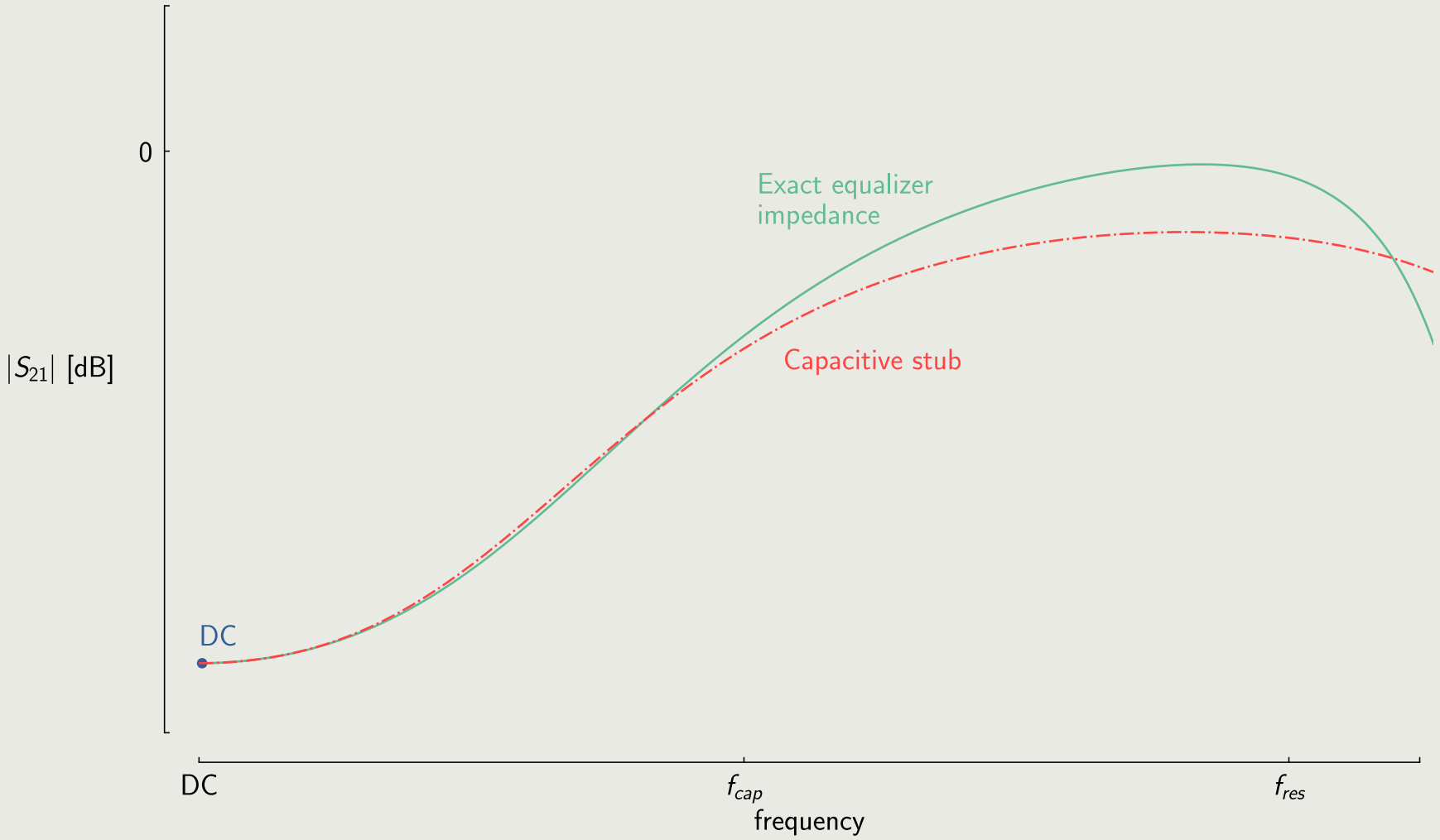

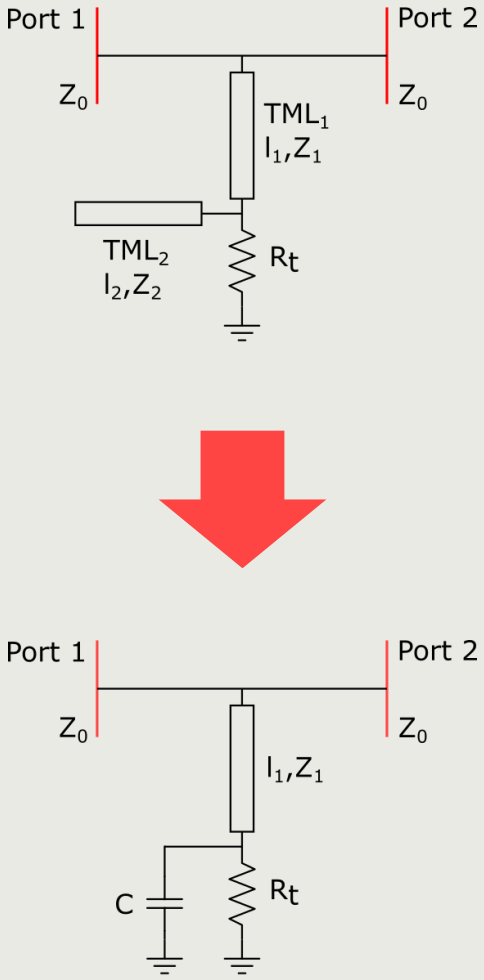

Operating modes facilitate equalizer synthesis

Resonant stub

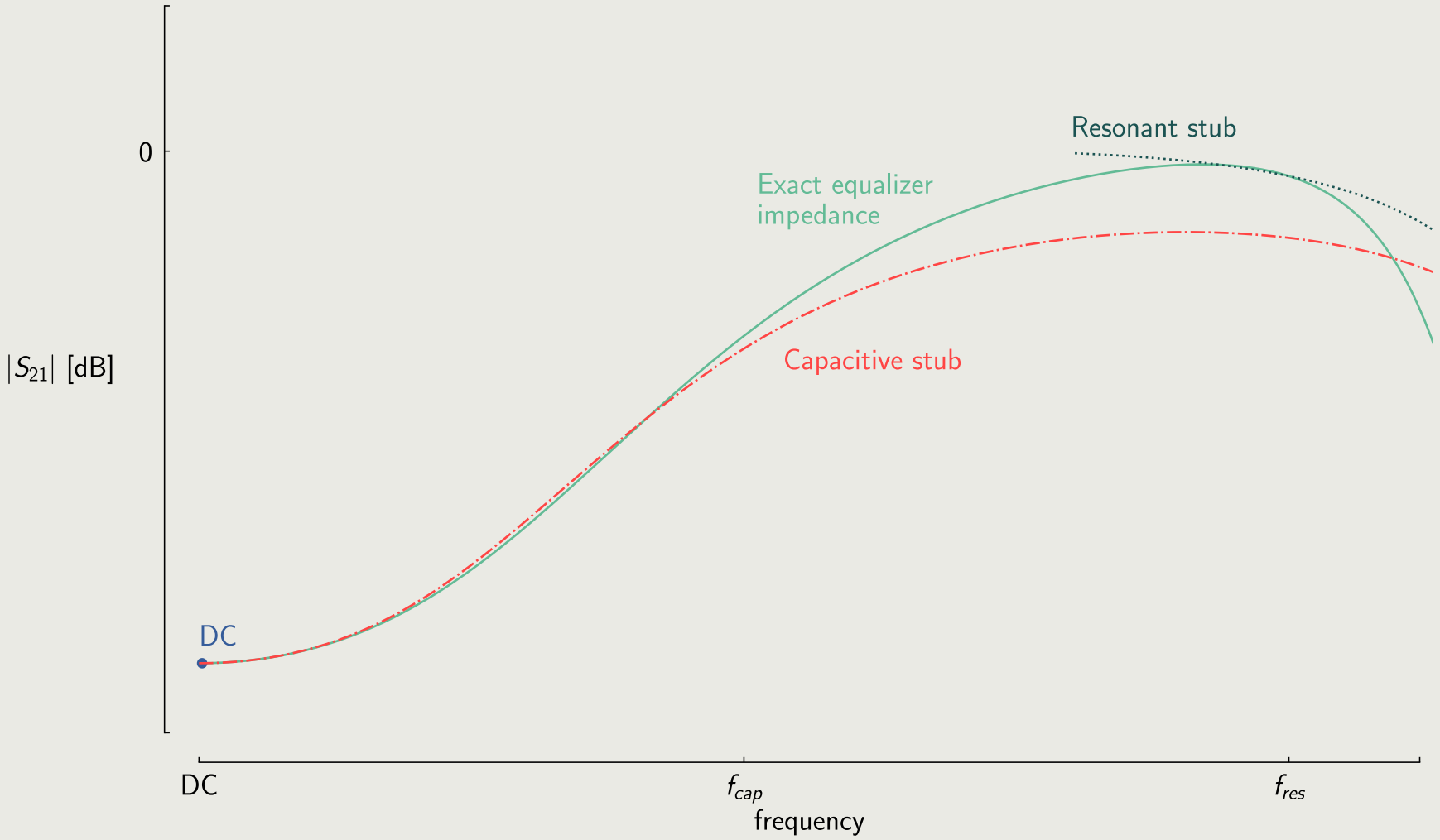

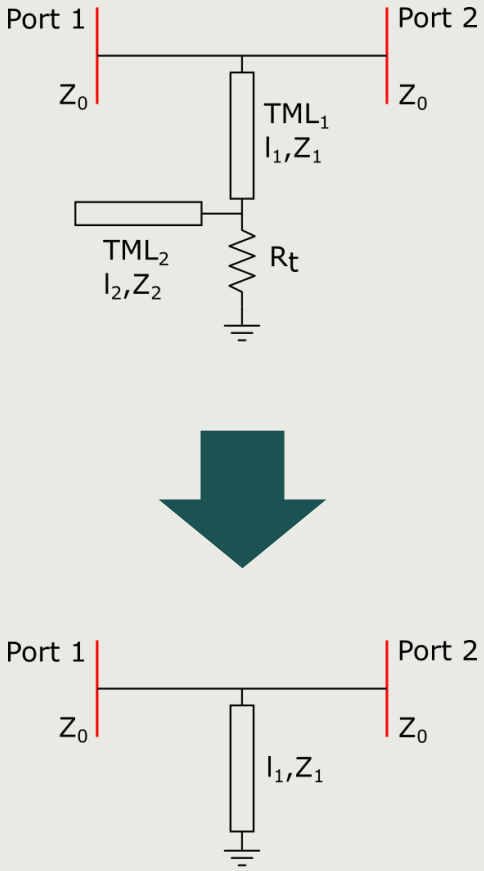

From single-ended to differential equalizer

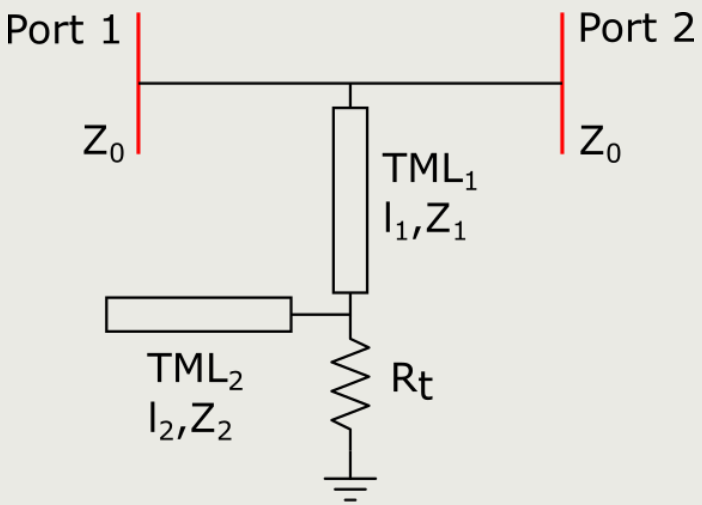

Single-ended
to differential

by mirroring

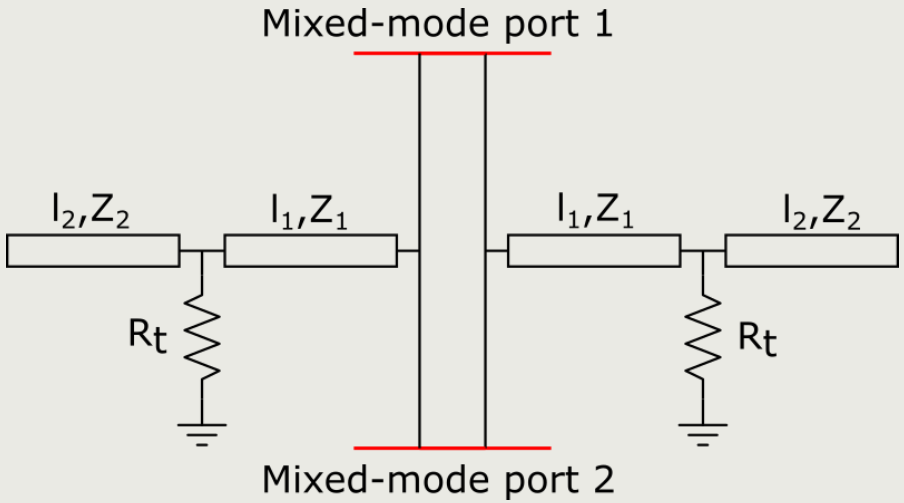

Differential-mode equalization

Common-mode filtering

Application to serpentine delay line

Conclusions

Place the equalizer in the ground plane

Defected ground plane introduces additional common-mode filtering

Technique proposed by the authors of [1], but with extended equalization capabilities for the differential mode

Common-mode attenuation works in two ways:

1) Resistors R_t already attenuate the common-mode signal

2) Defected ground plane introduces an impedance discontinuity for the common mode and hence lowers the transmission due to the additional reflections

The impedance discontinuity needs to be high enough in order to mitigate unwanted slot radiation

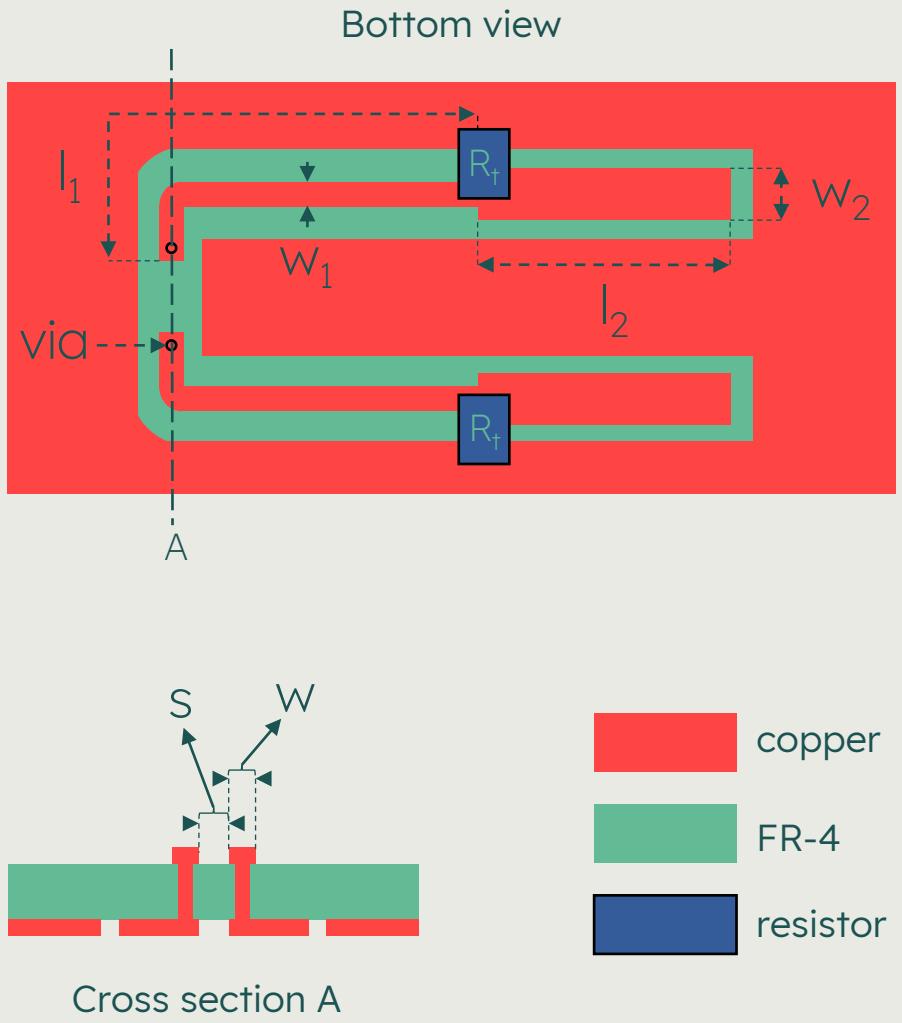

[1]: Cheng et al., IEEE Transactions on Components, Packaging and Manufacturing Technology (2013)

Differential-mode equalization

Common-mode filtering

Application to serpentine delay line

Conclusions

Differential delay line of 20 cm terminated with the proposed topology

Top view

Bottom view

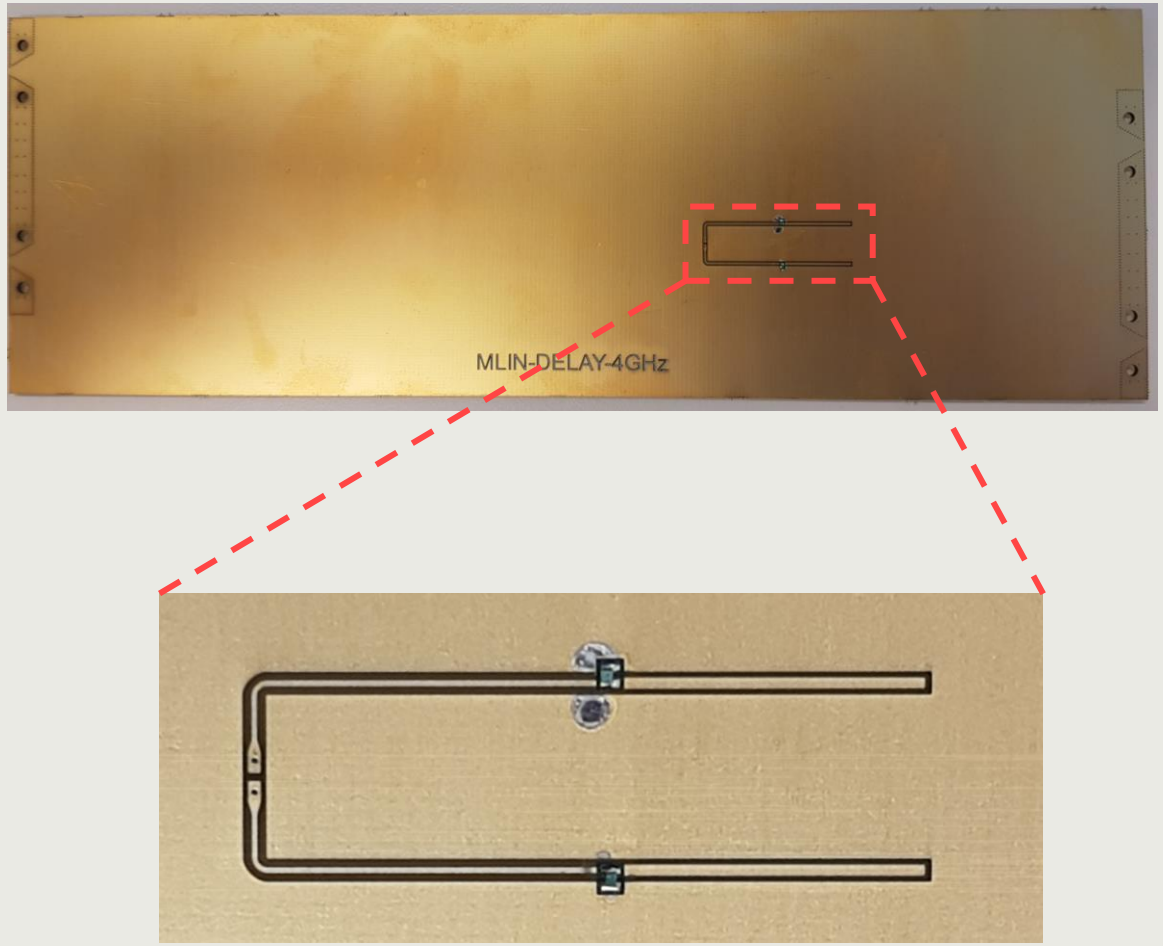

Differential-mode transmission gets equalized

Up to a 1-dB BW of 3.97 GHz with 0.36 dB ripple

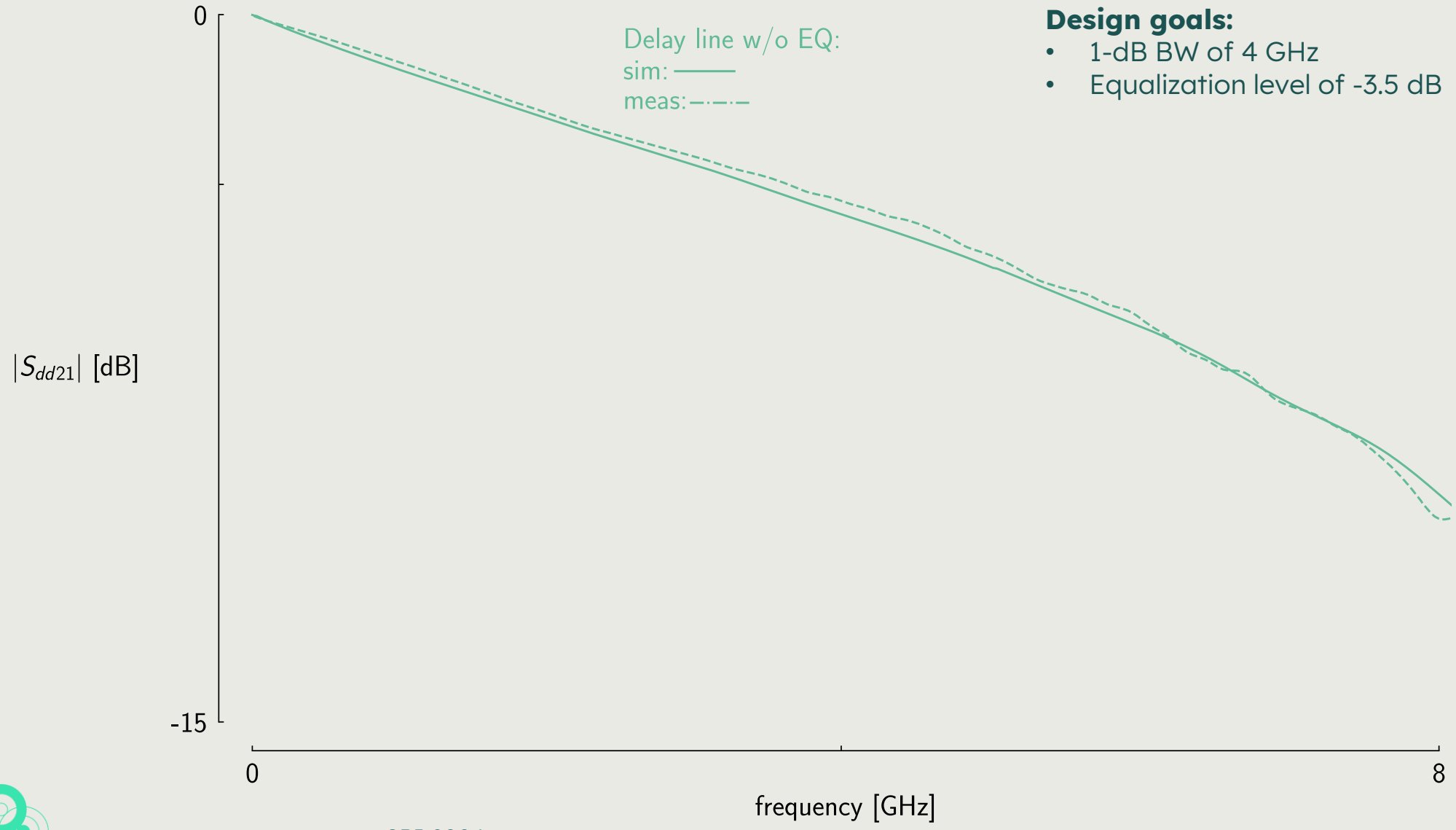

Design goals:

- 1-dB BW of 4 GHz
- Equalization level of -3.5 dB

Differential-mode transmission gets equalized

Up to a 1-dB BW of 3.97 GHz with 0.36 dB ripple

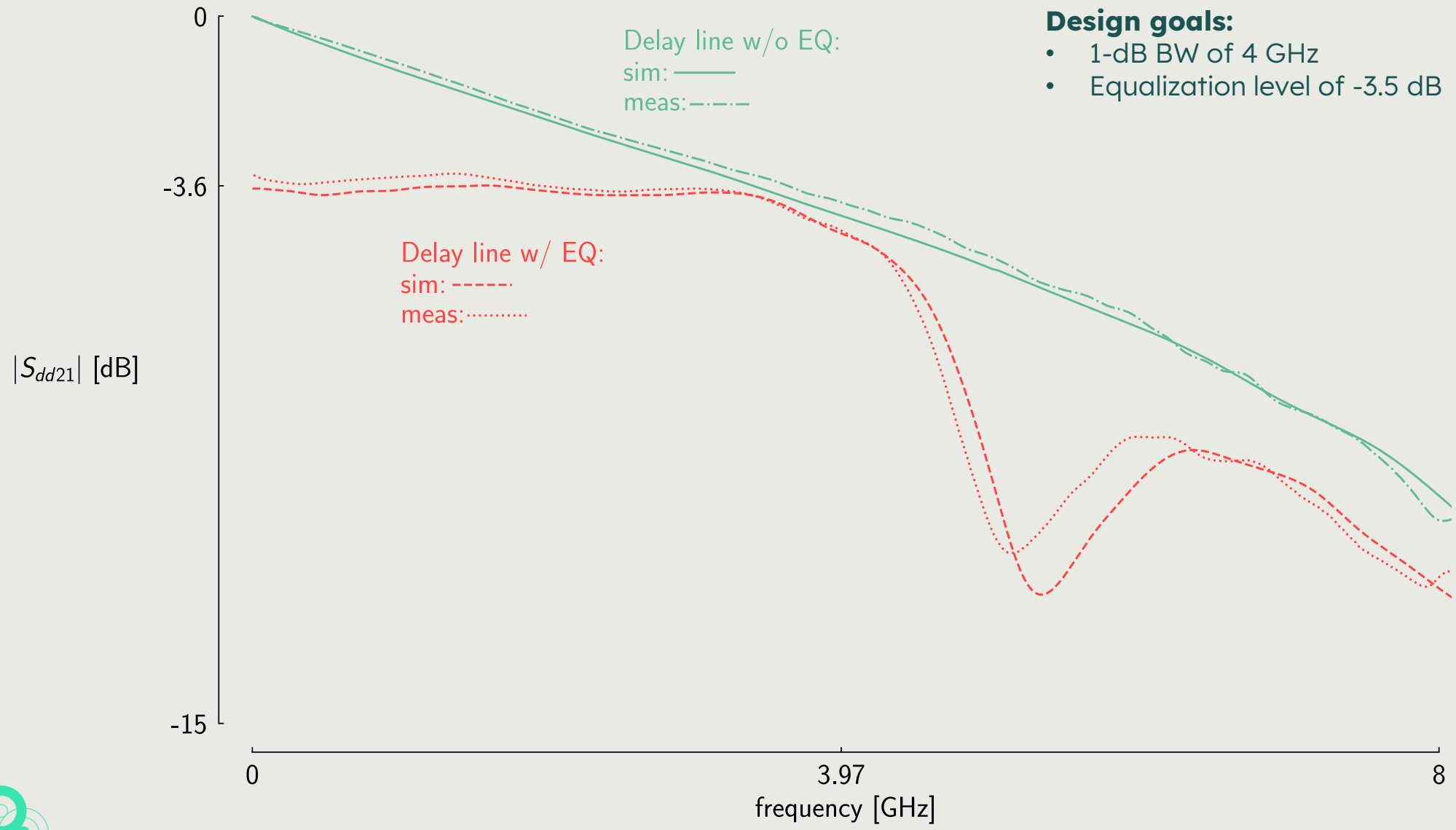

Design goals:

- 1-dB BW of 4 GHz
- Equalization level of -3.5 dB

Significant reduction in common-mode transmission

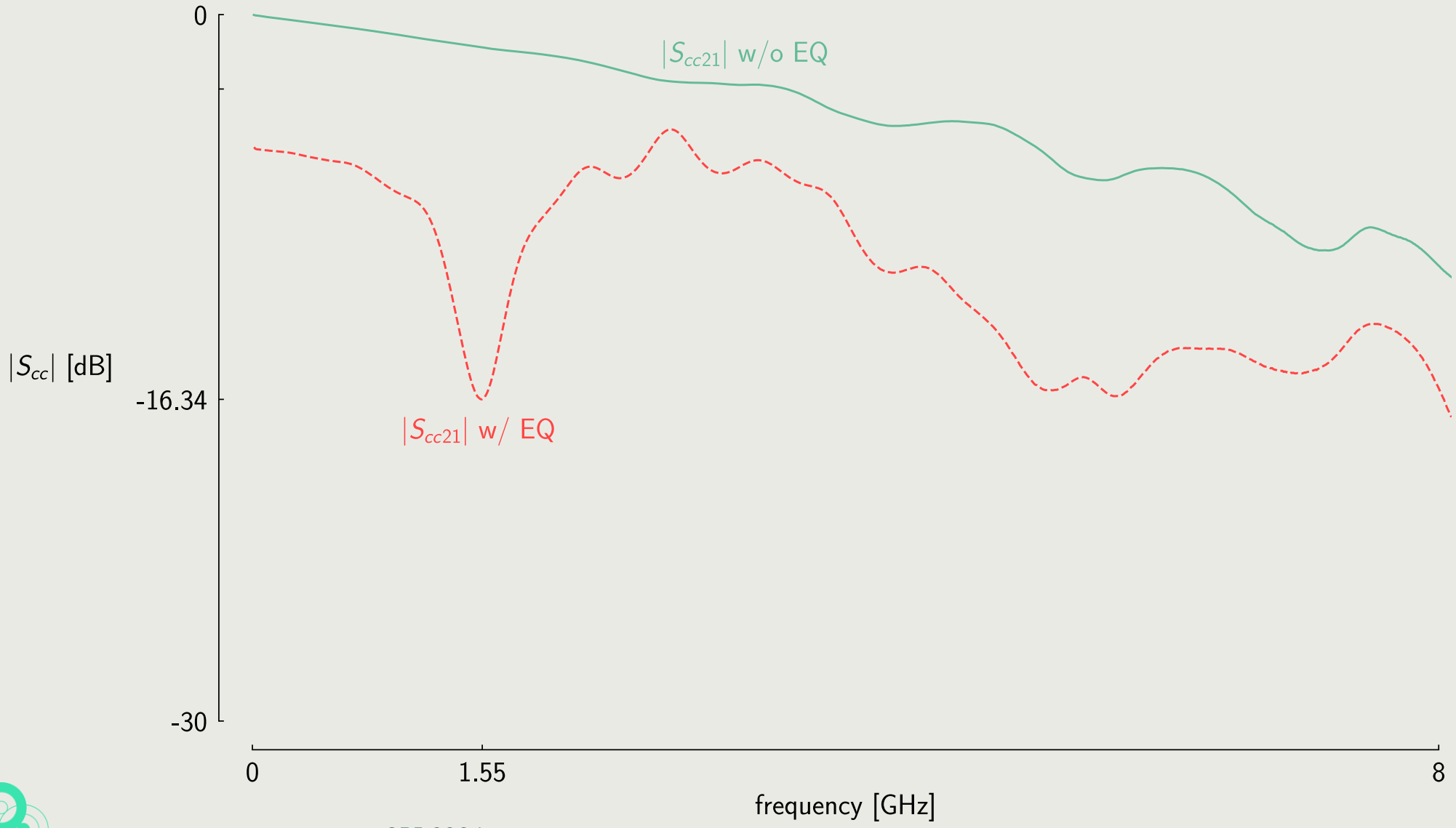

Significant reduction in common-mode transmission

Without introducing unwanted radiation

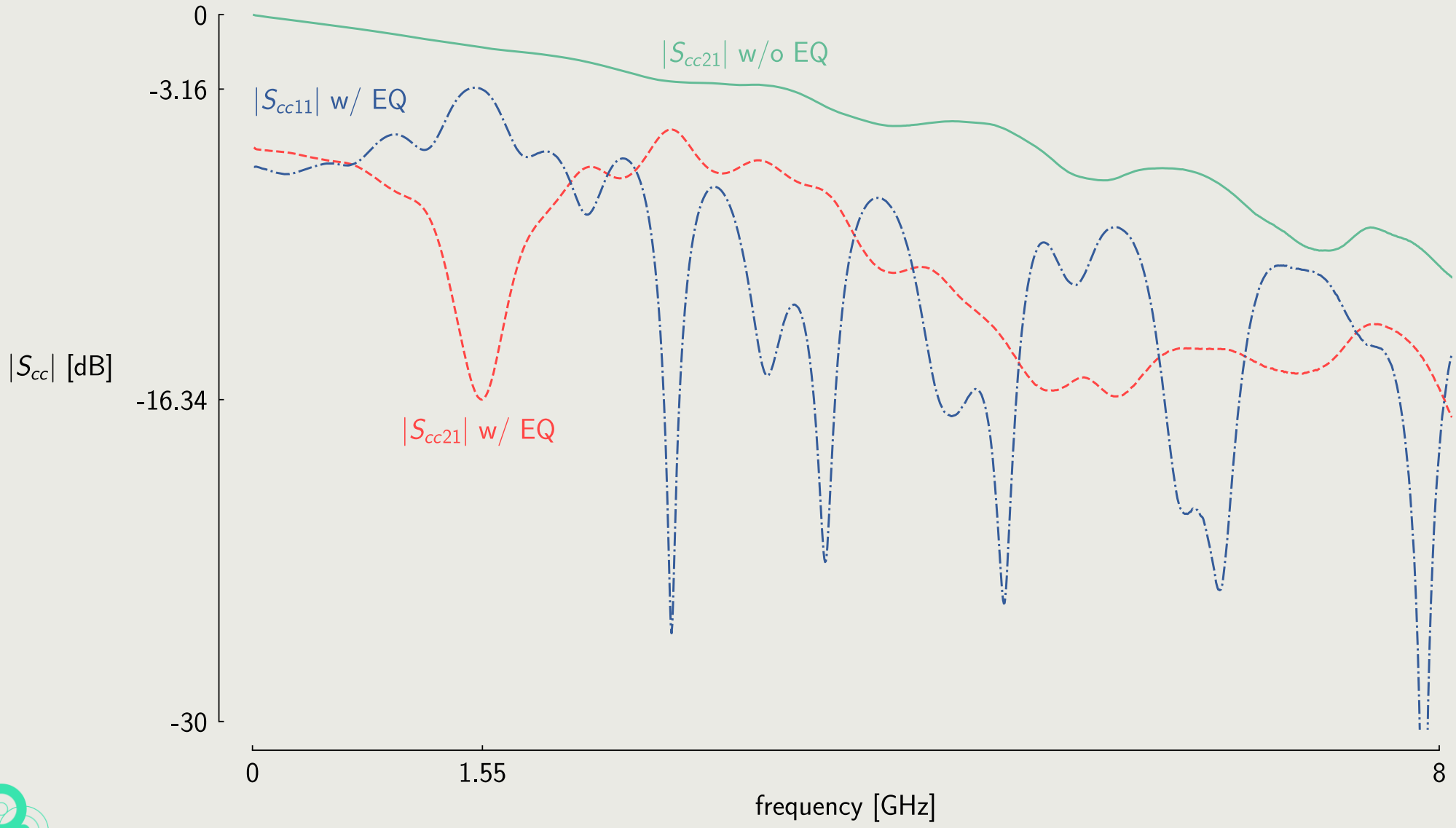

Equalizer succeeds in keeping the eye diagram open

Bitrate of 6 Gbps for a PAM-4 modulation

Delay line without equalizer

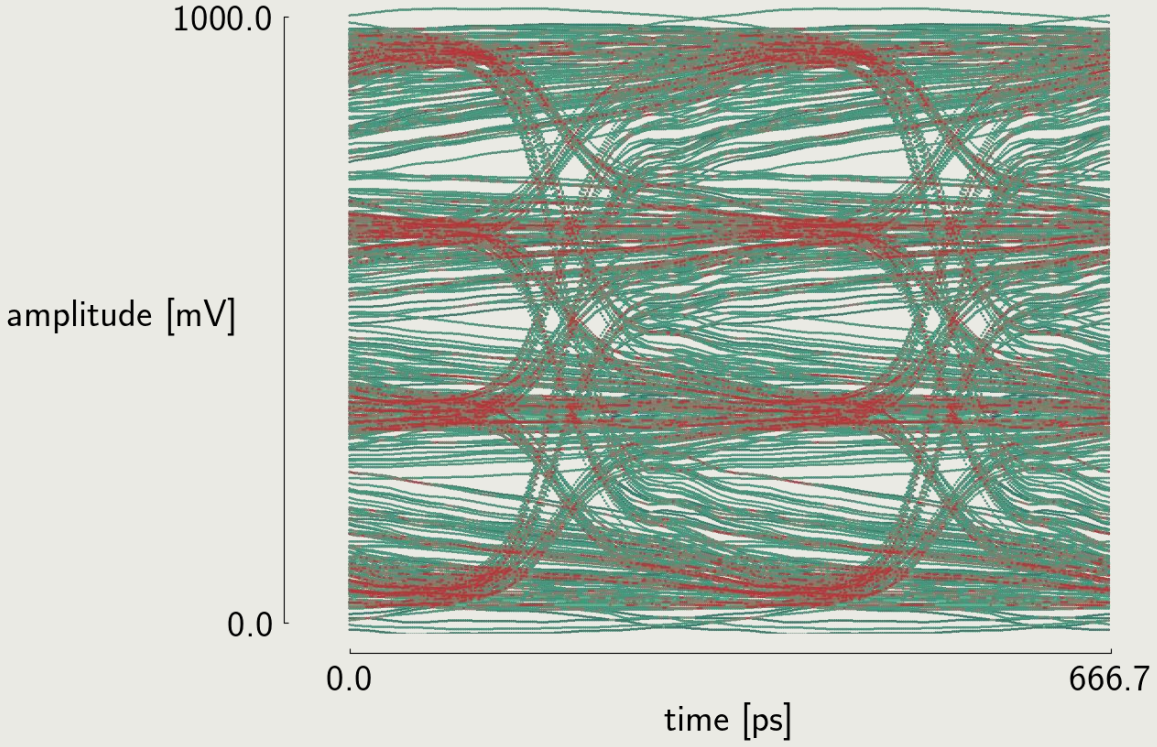

Delay line with equalizer

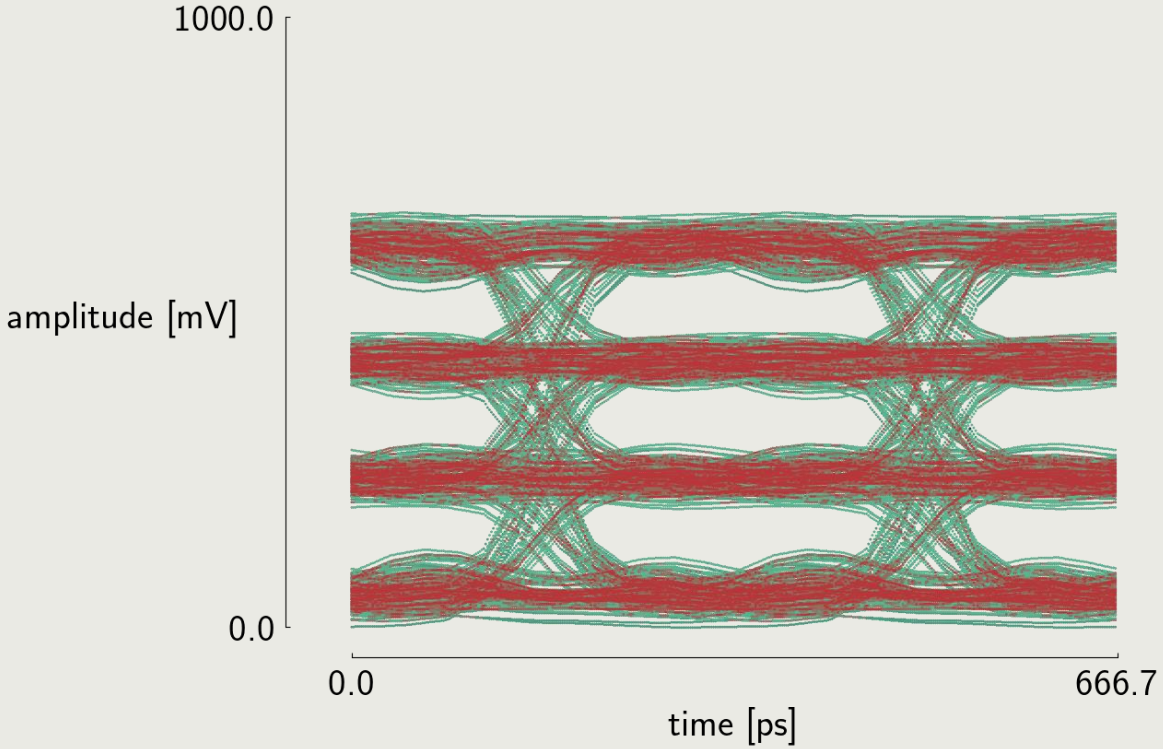

Equalizer succeeds in keeping the eye diagram open

For PAM-4 modulation

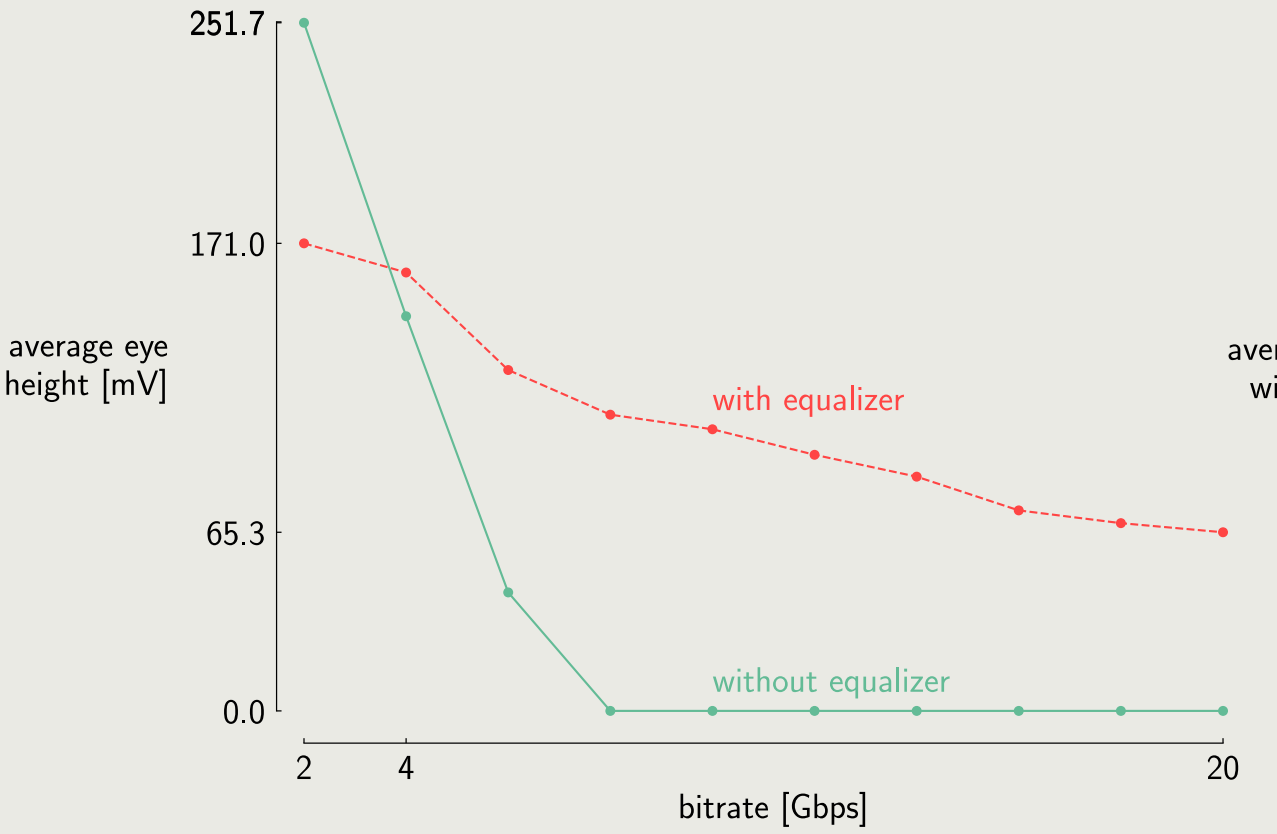

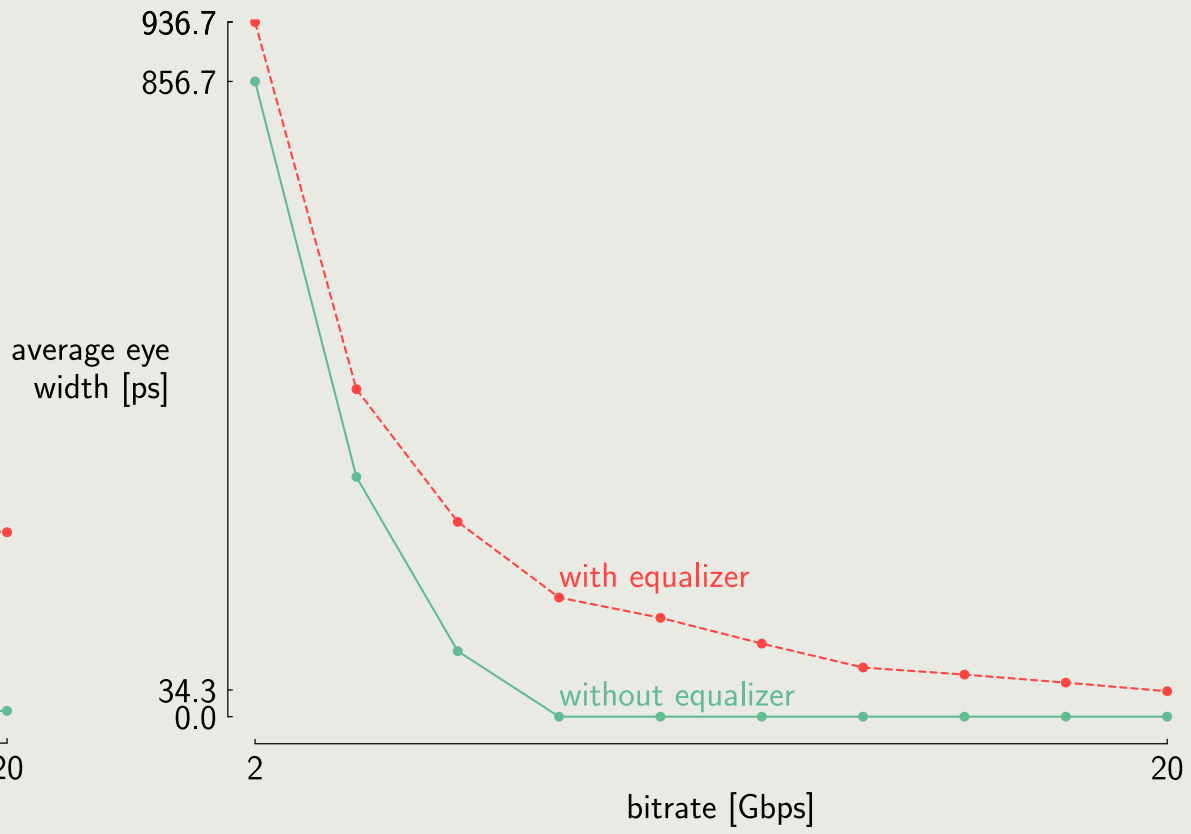

Differential-mode equalization

Common-mode filtering

Application to serpentine delay line

Conclusions

Conclusions

Increasing data rates put significant pressure on signal integrity

Our proposed topology equalizes the differential mode and reduces the common-mode noise, simultaneously

Straightforward equalizer synthesis by distinguishing different operating modes

Demonstrated a significant increase in signal integrity at the receiver for a PAM-4 modulation scheme

quest.

Quantum Mechanical &
Electromagnetic Systems
Modelling Lab

GHENT UNIVERSITY

imec

Technologiepark – Zwijnaarde 126, B-9052 Gent, Belgium
tim.pattyn@ugent.be
www.QuestLab.be

Tim PATTYN, PhD researcher